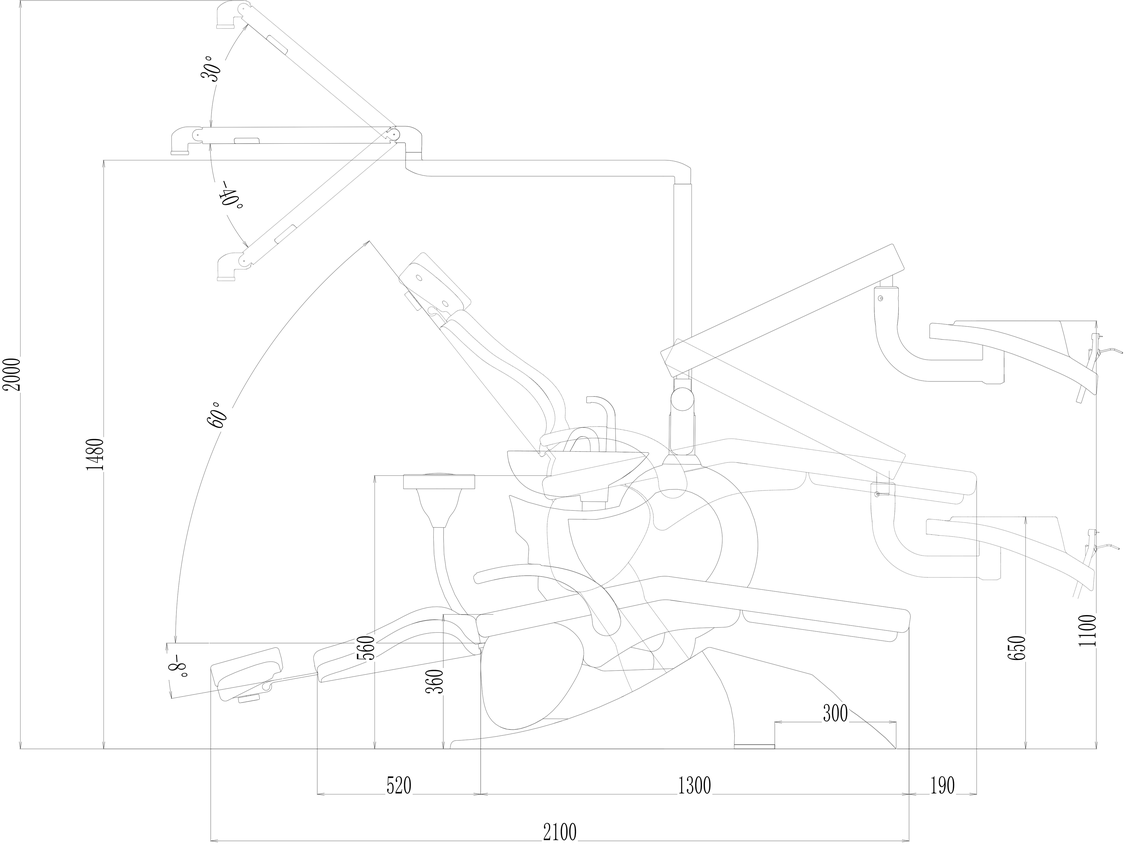
30°
-10°
60°
-8°
2000
1480
560
360
300
650
1100
520
1300
190
2100

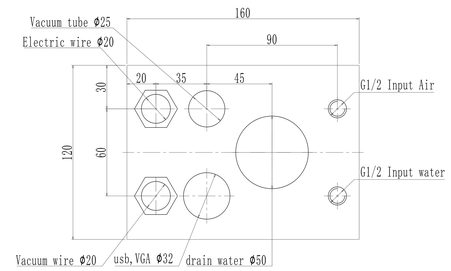
Vacuum tube Φ25
Electric wire Φ20
160
90
20
35
45
30
120
60
G1/2 Input Air
G1/2 Input water
Vacuum wire Φ20
usb,VGA Φ32
drain water Φ50

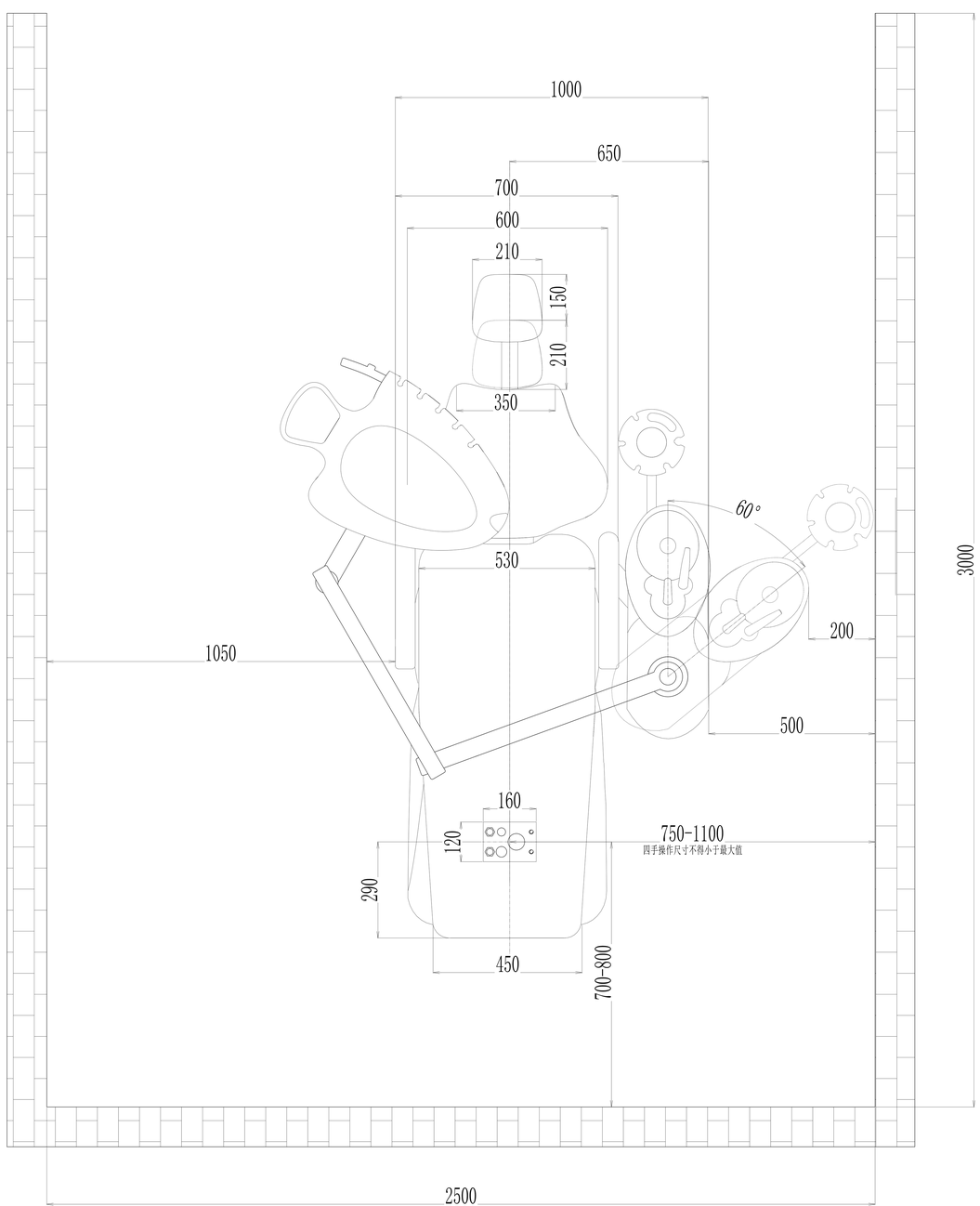
1000
650
700
600
210
150
210
350
60°
530
3000
200
1050
500
160
120
750-1100
四手操作尺寸不得小于最大值
290
450
700-800
2500

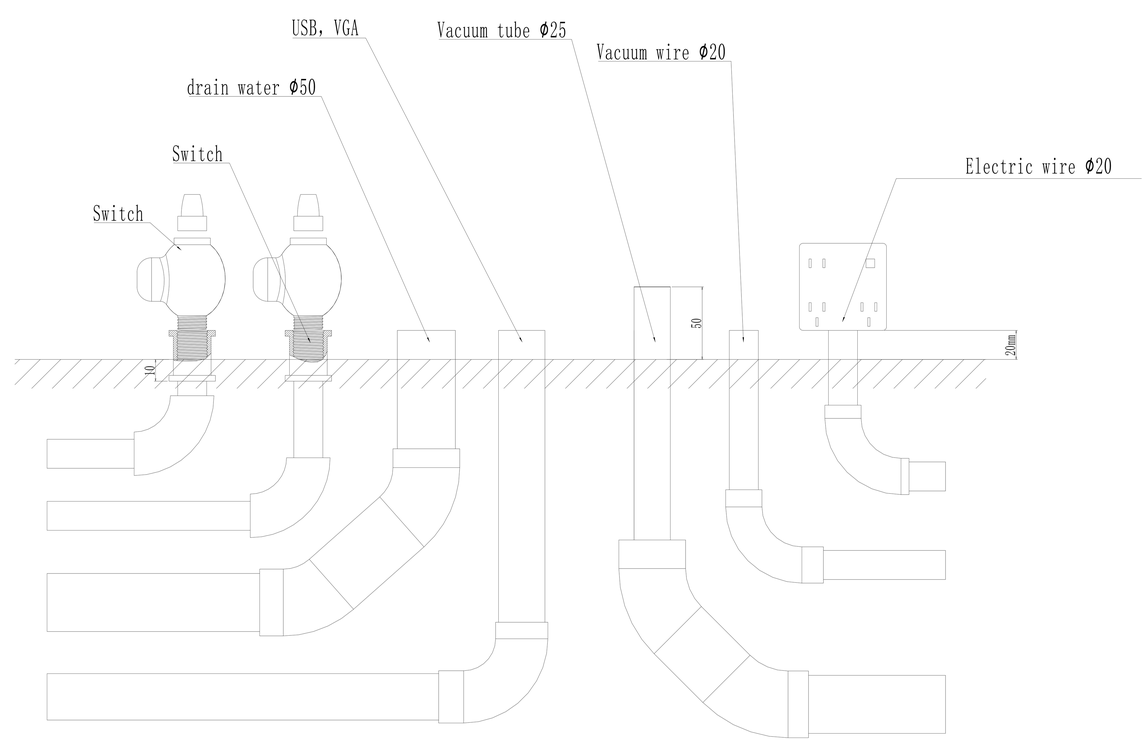
USB, VGA
Vacuum tube Φ25
Vacuum wire Φ20
drain water Φ50
Switch
Switch
Electric wire Φ20
50
10
20mm